## Differential Signals:

- Measured between two nodes as opposed to node to ground

## $V_a$, $V_b$:

$$V_A = \frac{V_A+V_B}{2} + \frac{V_A-V_B}{2}, \quad V_B = \frac{V_A+V_B}{2} + \frac{V_A-V_B}{2}$$

- CM: Common Mode DC Level
- DM: Differential Mode Signal

## Common Mode Response:

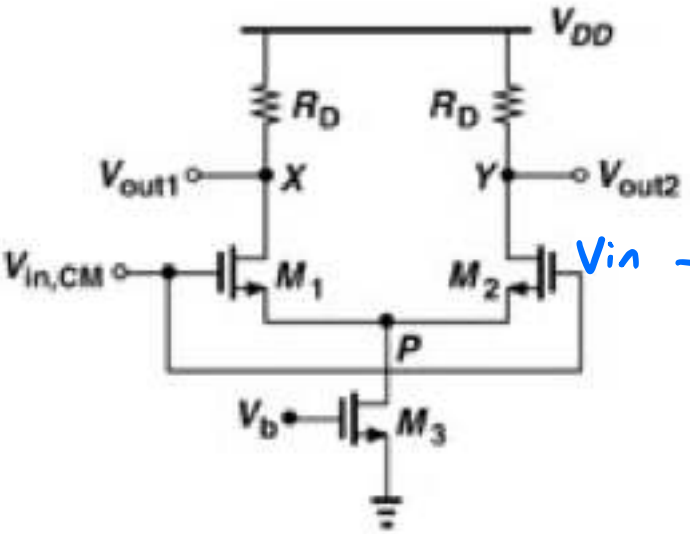


Range

$V_{in} \rightarrow 0 < V_{in} < V_{DD}$

if: $V_{in}=0$; $V_G=0$, transistors are off. No current

$V_{GS_1}+(V_b-V_{th3}) \rightarrow$ minimum voltage needed to operate

# Half-Circuit Model:

$V_{out_1} - V_{out_2}$

$V_{o,CM} = \frac{V_{od}}{2}$

$V_{out_1} - V_{out_2}$

$V_{o,CM} = -\frac{V_{od}}{2}$

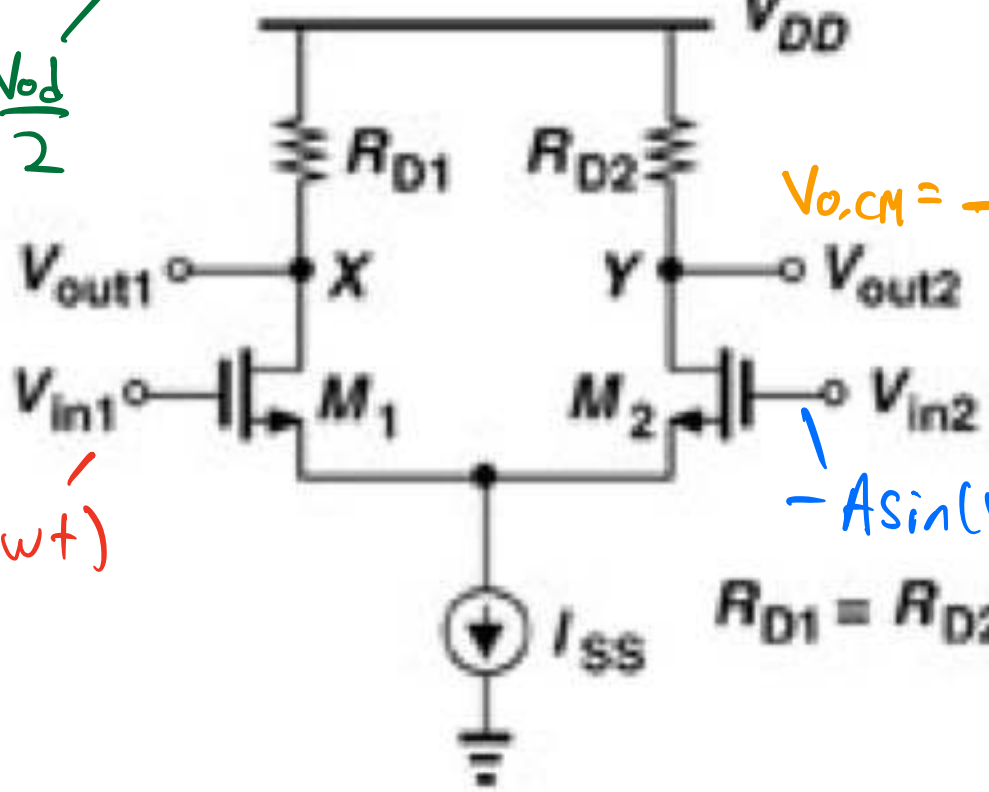


$A\sin(\omega t)$

$-A\sin(\omega t)$

$R_{D1} = R_{D2} = R_D$

## Case 1: (Small signal Gain $\lambda = 0$)

$$V_{in_1} = \frac{V_{in_1} + V_{in_2}}{2} + \frac{V_{in_1} - V_{in_2}}{2} : V_{CM} = \frac{V_{id}}{2} = V_{DC} + A\sin(\omega t)$$

$$V_{in_2} = \frac{V_{in_1} + V_{in_2}}{2} + \frac{V_{in_1} - V_{in_2}}{2} : V_{CM} = \frac{V_{id}}{2} = V_{DC} - A\sin(\omega t)$$

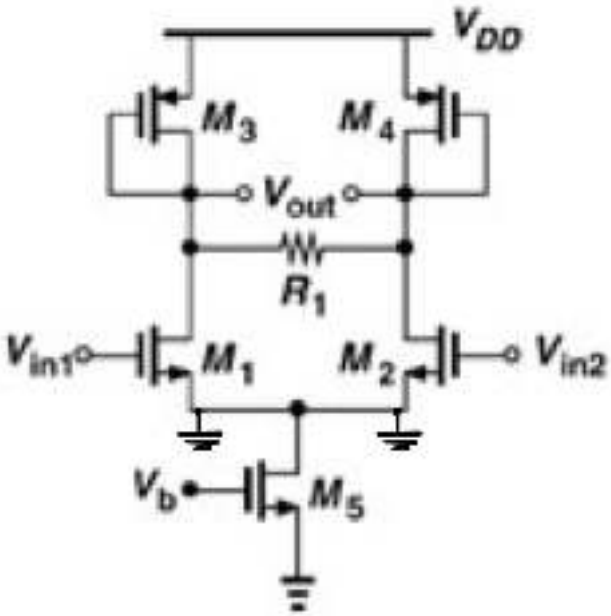


- Common Source amplifier with diode connected load in parallel with a resistive load

Half-Circuit Analysis

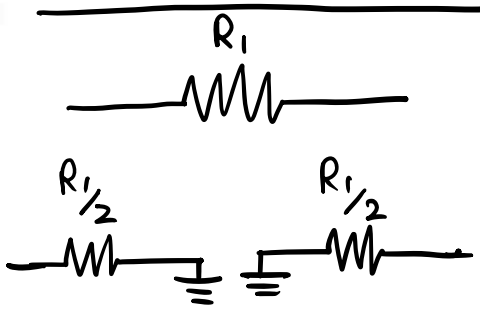


$\lambda = 0$:

$$\frac{V_{od}}{V_{id}} = -g_{m_1}\left(\frac{1}{g_{m3}} \| \frac{R_1}{2}\right)$$

$\lambda \neq 0$:

$$\frac{V_{od}}{V_{id}} = -g_{m_1}\left(\frac{1}{g_{m3}} \| r_{o3} \| r_{o1}\right)$$

- Sketch the small-signal gain of a differential pair as a function of its input common-mode level.

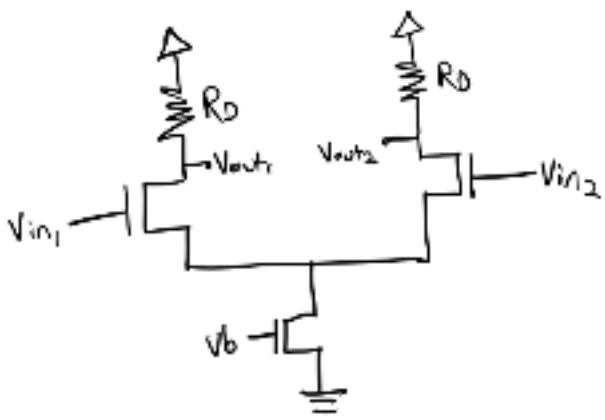


$$A_v = -g_{m_1}(R_D \| r_{o_1})$$

We have:

$$\boxed{I_{D1} - I_{D2} = \frac{1}{2}\mu_n C_{ox}\frac{W}{L}\underbrace{(V_{in1} - V_{in2})}_{\text{Differential input voltage}}\sqrt{\frac{4I_{SS}}{\mu_n C_{ox}\frac{W}{L}} - (V_{in1} - V_{in2})^2}}$$

$$\Delta i_D = g_{m_1}\Delta V_{in}$$

# Differential Gain

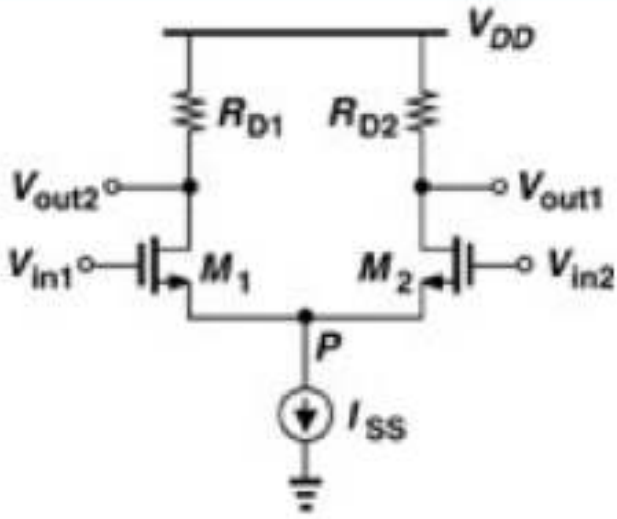


$$A_v(diff) = \frac{V_{out1} - V_{out2}}{V_{in1} - V_{in2}} = g_m R_D$$

$$A_v(Single-Ended) = \frac{g_m}{2} R_D$$

# Common-Mode Response

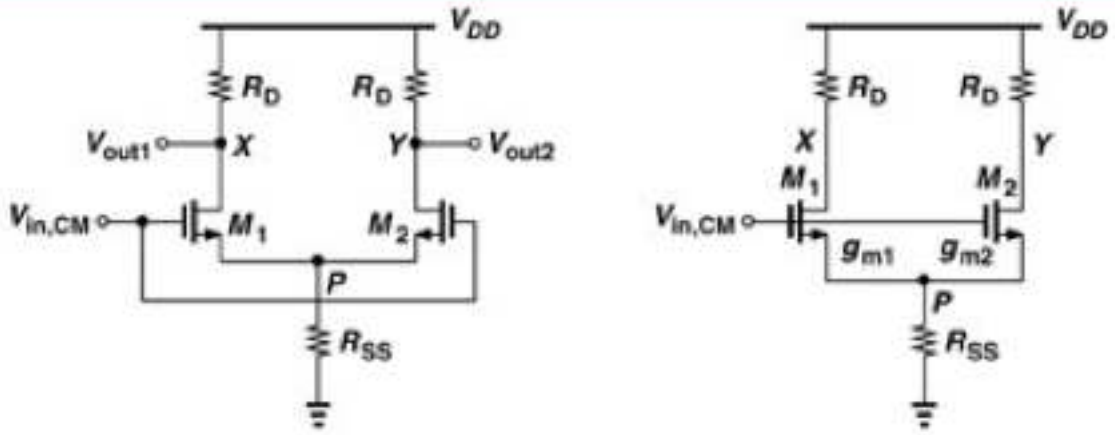


$$\frac{V_X - V_Y}{V_{in,CM}} = -\frac{g_{m1} - g_{m2}}{(g_{m1} + g_{m2})R_{SS} + 1} R_D$$

Want to design with a large $R_{SS}$

# MOS Loads

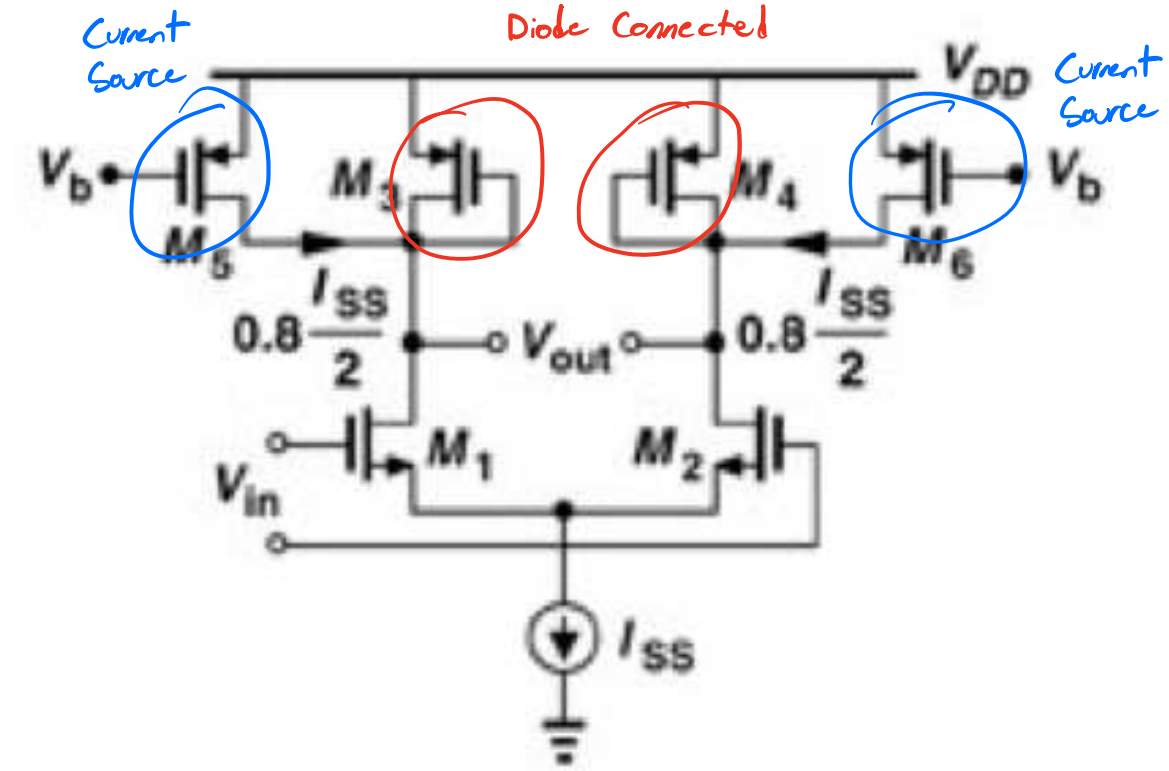


## Gilbert Cell:

- Wanted to create a variable gain amplifier (Differential)

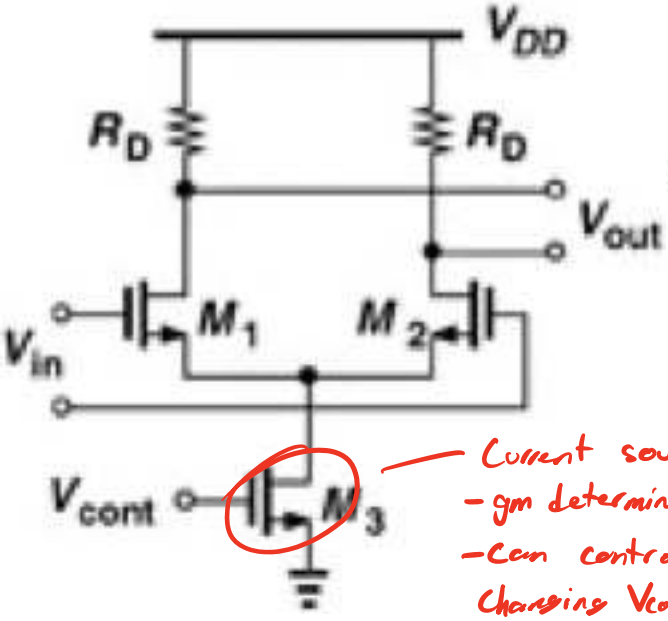


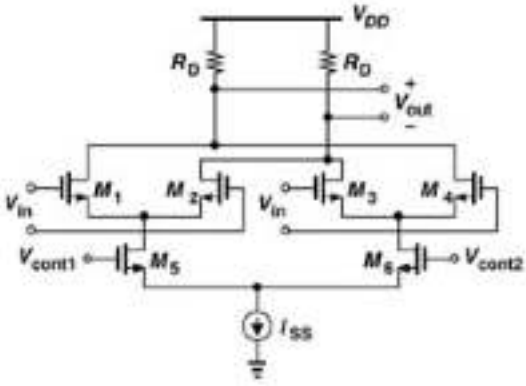


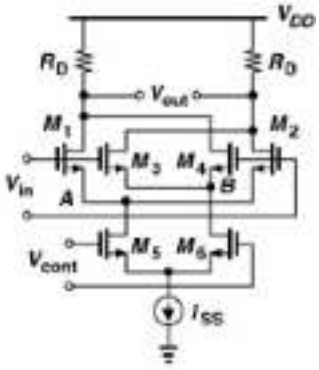


$$V_{OUT} = kV_{in}V_{cont}$$

Current source
- gm determined by $I_D$
- Can control $I_D$ by changing $V_{cont}$
- Therefore gain changes

$A_V = g_m R_D$